PRESENT SITUATION AND FUTURE POTENTIAL OF CASSAVA IN THAILAND

Klanarong Sriroth[1,2] Boonrieng Lamchaiyaphum[2] and Kuakoon Piyachomkwan[3]

ABSTRACT

In Thailand cassava (*Manihot esculenta* Crantz) is considered as one of the most important economic crops. Thailand has demonstrated the importance of cassava as more than a subsistence crop, and has developed a large and complex industrial system for processing and marketing of the crop. Production of cassava has steadily increased during the 1970s and 80s through expansion of the planted area, but has decreased again since the early 1990s. Despite the total planted area remained unchangeable, the production of cassava has increased by improving the national average yield which is approximately 17 t/ha. Major production problems are declining soil productivity, soil erosion and long drought period. Since 1959, the products derived from cassava have been a major export commodity for Thailand, assisted by relatively easy market access to the EU and recently to China.

Cassava roots are utilized for making dry chips, pellets, native starch, modified starch, MSG (monosodium glutamate), glucose, fructose, sorbitol, sago, citric acid which are used in the food, beverage, feed, paper, textile, and plywood industries. In addition, they are used as the major raw materials for the production of bioethanol, an alternative biofuel to be blended with petroleum gasoline.

CASSAVA PRODUCTION AND MARKETING

1. Cassava production

Cassava (*Manihot esculenta* Crantz) is the third most important crop in Thailand. The root crop is known by many names in Thailand, but "cassava" and "tapioca" are the most widely used terms. Cassava was introduced into the southern part of Thailand from Malaysia during 1786-1840 (CIP, 1992) and was gradually distributed throughout the country within a few years. The main concentration of the crop is now found in the northeast of Thailand, especially in Nakhon Ratchasima province (**Figure 1**). Cassava has excellent drought tolerance properties and can be planted in almost all types of soil. Therefore, the planted area has rapidly increased. Cassava is grown by a large number of farmers, who own small plots of land (about 0.5-2 ha). No organized large-scale plantations have been established in Thailand, as this is prohibited by the land reform act. The total acreage of cassava, which peaked at about 1.6 million ha in 1988/89 is now reduced to 1.05 million ha (**Table 1**). This trend is driven by a national agricultural policy promoting an increase in yields with unchanged planted area. The total production in 2006 is then expected to be greater than 20 million tonnes.

[1] Dept. of Biotechnology, Faculty of Agro-Industry, Kasetsart University, Bangkok, Thailand.
[2] Kasetsart Agricultural and Agro-Industrial Product Improvement Institute (KAPI), Kasetsart University, Bangkok, Thailand. Email: aapkrs@ku.ac.th
[3] Cassava and Starch Technology Research Unit, National Center for Genetic Engineering and Biotechnology, Bangkok, Thailand.

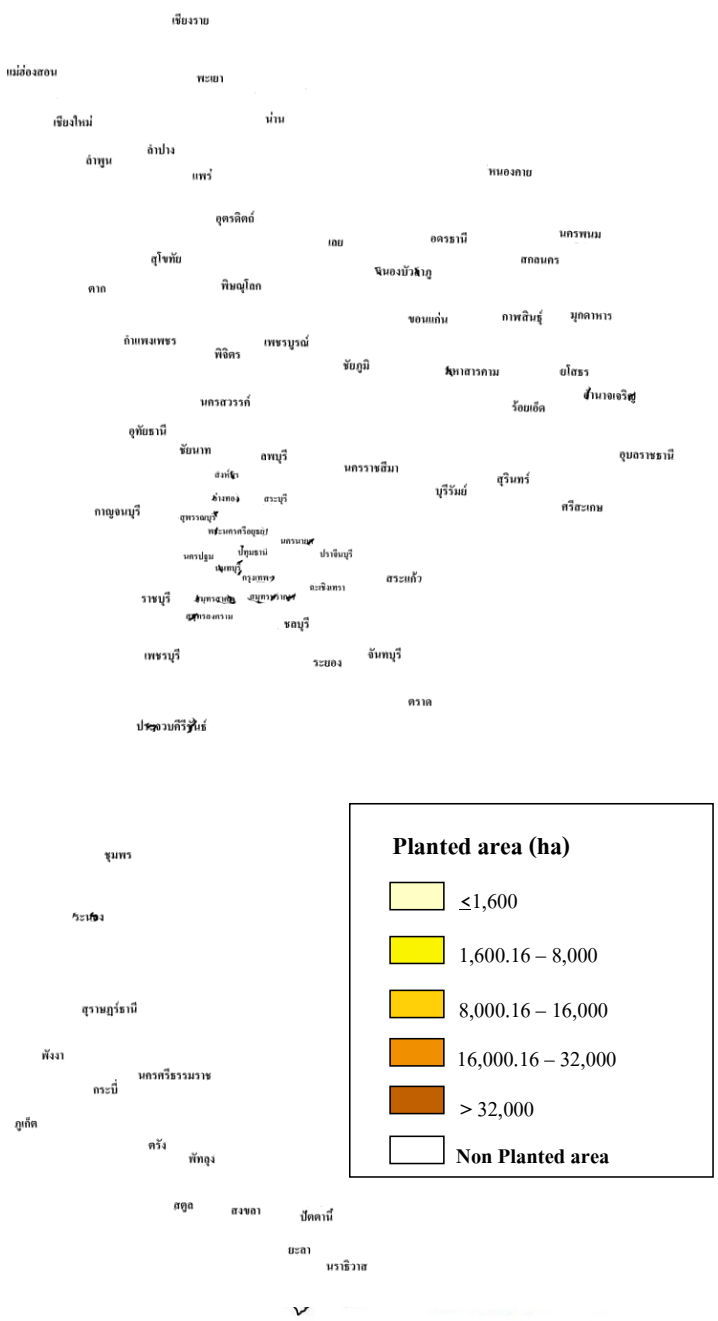

Figure 1. *Distribution of cassava planted area in Thailand in 2003/04.*
Source: *Office of Agricultural Economics, 2004*

Table 1. Planted area, production and yield of cassava in Thailand during 1994/95 to 2004/2005.

Year	Planted area (ha)	Total production (tonnes)	Yield (t/ha)
1994/95	1,245,157	16,217,378	13.02
1995/96	1,228,114	17,387,780	14.16
1996/97	1,230,381	18,083,579	14.70
1997/98	1,119,096	15,968,474	14.27
1998/99	1,172,374	16,057,000	14.77
1999/00	1,095,631	19,064,000	15.45
2000/01	1,106,880	18,396,000	17.53
2001/02	999,040	16,868,000	17.66
2002/03	1,029,600	19,718,000	19.29
2003/04	1,081,120	21,440,000	20.27
2004/05	1,043,840	16,938,000	17.18

Source : *Office of Agricultural Economics, 2005.*

2. Varieties

Until the early 1990s the most popular cassava variety was the local variety. A selected local variety was named Rayong 1, and was the first variety used as a source of industrial raw material. The cassava breeding program has continued progressively at:

- Rayong Field Crops Research Center (RAY-FCR), Department of Agricultural (DOA), Ministry of Agriculture
- Sriracha Research Center of Kasetsart University (KU), Ministry of University Affairs, and
- Research and Training Center of the Thai Tapioca Development Institute (TTDI) Foundation.

The goal of cassava breeding in Thailand is to increase yields and root starch content, as well as the crop's adaptability to a wide range of growing conditions. Starch yield is a function of starch content and root dry matter yield. There has been no systematic institutional breeding of cassava for improved cooking quality in Thailand. Of the many varieties developed and released only a few are now widely adopted, mainly Kasetsart 50, Rayong 5, Rayong 90, Huaybong 60, Rayong 7 and particuraly Rayong 9, which gave high ethanol yield. (**Table 2**).

Table 2. **Recommended cassava varieties in Thailand.**

Cultivar	Year released	Parents	Main features
Rayong 1	1975	From local cultivars	High yield Good adaptability
Rayong 3	1983	MMex 55 x MVen 307	High root DM Low cyanide
Rayong 60	1987	MCol 1684 x Rayong 1	Early harvest High yield
Rayong 90	1991	CMC 76 x V43	High root DM High yield
Kasetsart 50	1992	Rayong 1 x Rayong 90	High root DM High yield Good adaptability
Rayong 5	1994	CMR 27-77-10 x Rayong 3	High yield High root DM Good adaptability
Rayong 72	1999	Rayong 1 x Rayong 5	High yield Relatively high DM Adapted to Northeast Thailand
Huaybong 60	2003	Rayong 5 x Kasetsart 50	High yield High root DM High starch viscosity
Rayong 7	2005	CMR30-71-25 x OMR29-20-118	High yield Good adaptability
Rayong 9	2005	CMR31-19-23 x OMR29-20-118	High yield of ethanol

Source : *Limsila et al., 1996; Sarakarn et al., 2001.*

3. Production Costs and Net Income

Production costs (**Table 3**) are mainly dependent on the time of planting and environmental conditions during growth. For example, the first planting period (Feb-Apr) and the second planting period (Nov-Jan), known as early and late rainy season plantings, respectively, need different levels of weed control and inputs. Variable costs account for about 80% of the total costs. Major components of production costs in descending order are labor, land rent and materials (**Table 3**). Net income per rai varied from –20.61 to

911.09 baht during 1995-1997. In 1997 there was an oversupply of fresh roots, which depressed the root price to 700 baht per tonne (TTTA, 1998). The Ministry of Commerce, in an attempt to protect the farmers, intervened in the purchasing cycle by providing soft loans to starch factories to encourage them to purchase roots at 1,000 baht/tonne. This situation was short-term, as a few months later, the environmental conditions, mainly drought due to El Nio, led to a sharp reduction in cassava root yields. Indonesia was particularly affected and the country had to import cassava products from Thailand to supplement this shortfall. The root price in Thailand increased to 2.22 baht per kg resulting in an average root price for 1998 of 1,766 baht per tonne (TTTA, 1999).

The low root price in early 1997 also led to a reduction in the area planted to cassava that year, which in turn resulted in a high price of roots in 1998 (up to 2,500 baht). Aggravating the situation of cassava was the new exchange rate in July 1997 (from 25 to 42 baht/dollar). The crop harvested in late 1999, was not affected by a high price as in the previous year. The cassava root price in Dec 1999, was about 920 baht per tonne.

In 2000, the world economic crisis was reflected by a reduction in meat consumption and surplus of cereals, especially of maize, driven by reduced demand from the feed sector. This had depressed the current maize and maize starch prices, and as cassava products (pellets, starch) have to compete directly with maize, this had substantially reduced the price of these cassava products that subsequently reflected the lower root price, i.e. 630 baht per tonne (Office of Agricultural Economics, 2005). Recently the situation of cassava root price, however, has altered due to a shortage of root supply caused by the drought in 2004/2005 and the government approval of the national program on fuel ethanol produced from cassava. This leads to an increase in root price, which is currently approximately 1,500 baht per tonne.

Table 3. **Variable and fixed costs of cassava planting in Thailand during 2003-2005.**

	2003	2004	2005
Variable costs (baht/rai)	**1,952.88**	**2,014.31**	**2,248.43**
1. Labor costs	1,149.78	1,206.98	1,324.89
Land preparation	289.88	293.08	325.11
Planting	133.79	136.58	162.22
Weed control	340.17	346.59	403.75
Harvesting	385.94	430.73	433.81
Transportation	-	-	-
2. Material costs	**617.53**	**624.21**	**719.14**
Planting material	182.91	204.69	224.83
Fertilizers	286.43	272.21	321.70
Herbicides	135.15	134.27	159.57
Fuel	6.71	6.71	6.71
Accessories	4.66	4.66	4.66
3. Miscellaneous costs	**185.57**	**184.79**	**206.67**
Reparation	-	1.67	1.67
Interest	185.57	183.12	204.40
Fixed costs (baht/rai)	**335.11**	**335.11**	**335.11**
Land rent	324.34	324.34	324.34
Depreciation	9.63	9.63	9.63
Interest	1.14	1.14	1.14
Production costs (baht/rai)	**2,287.99**	**2,349.42**	**2,583.54**
Production cost (baht/kg)	0.74	0.72	0.94
Yield (kg/rai)	3,087.00	3,224.00	2,749.00
Price (baht/kg)	0.93	0.80	1.50
Gross income (baht/rai)	2,870.91	2,595.20	(-)*
Net income (baht/rai)	582.92	245.78	(-)*
Net income (baht/kg)	0.19	0.08	-

1rai = 0.16 hectare (ha)
1 US$ = 41 baht until December 2005
Source: *Office of Agricultural Economics, 2005.*
**to be announced*

4. Cassava Marketing

The structure of the cassava market in Thailand is depicted in **Figures 2** and **3**.

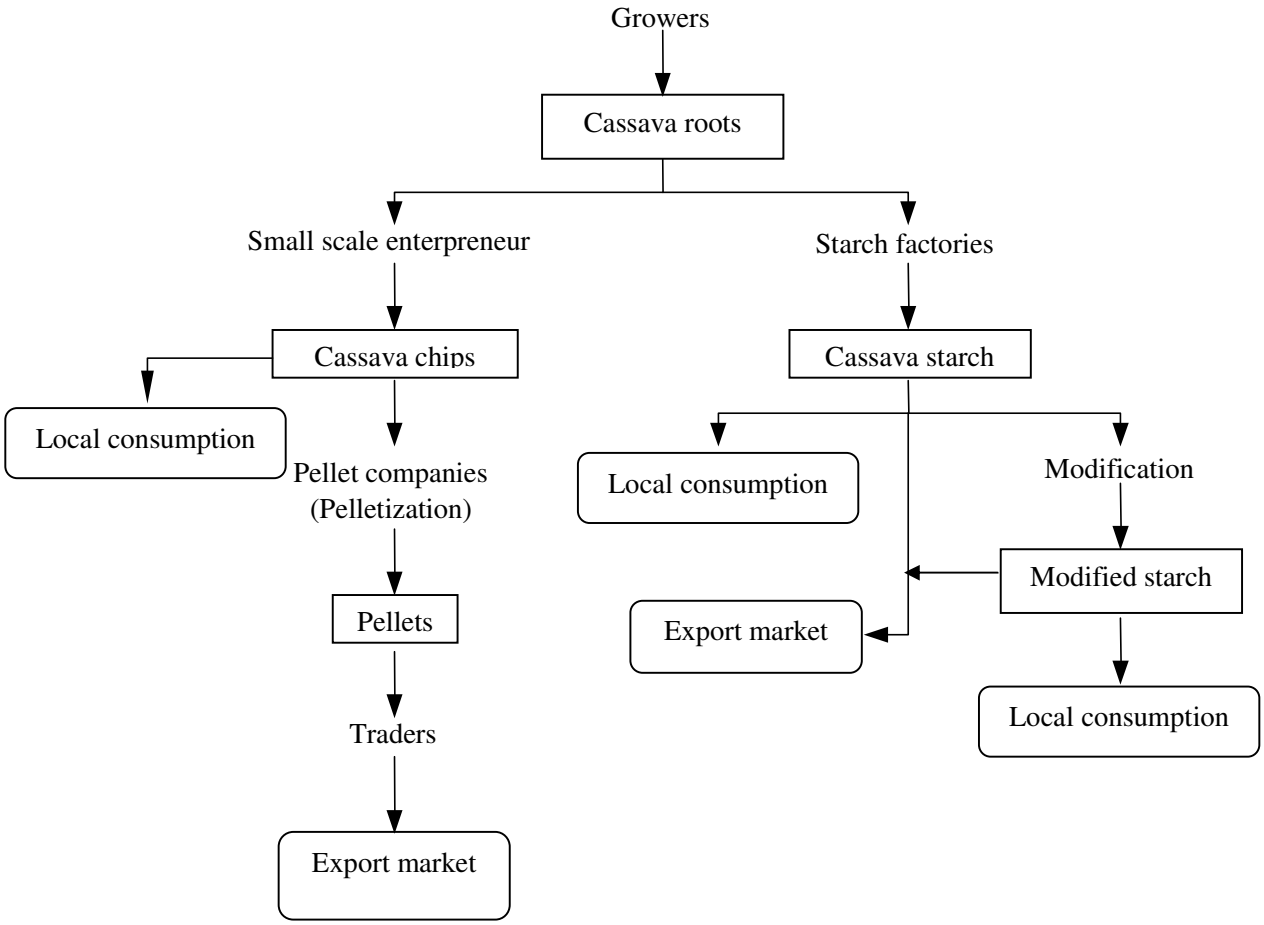

Figure 2. *Marketing structure of cassava in Thailand.*

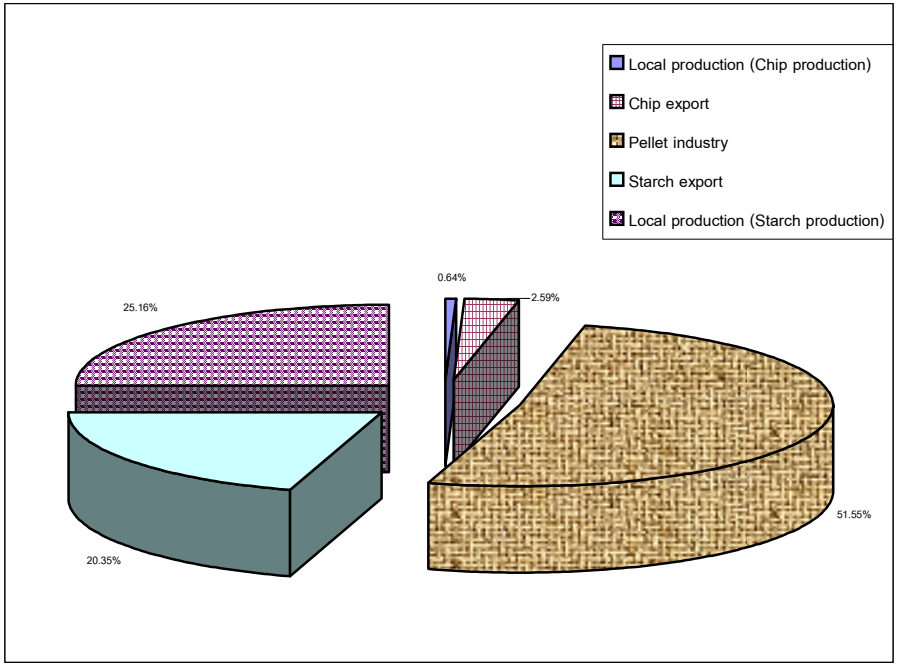

Figure 3. *Distribution of cassava roots for industrial processing in Thailand in 1998.*

Note: *Modified starches are partially distributed over export and local uses in food, paper, textile and plywood industries (Modified from TTTA, 1999)*

CASSAVA PROCESSING

1. Cassava Chip Industry

Cassava chip factories are small-scale enterprises and most have no formal company registration. The manufacture of cassava chips is recognized as an agricultural activity; factories belong to farmers or small business men and are located in close proximity to the growing area. The chipping factories are installed with simple equipment, consisting mainly of a chopper. Roots are loaded into the hopper of the chopping machine by tractor; after chopping into small pieces, the chips are sun-dried on a cement floor. The chips are spread to a specific density (kg/m^2), ensuring consistent final moisture contents of dried products. During drying, which typically requires 2-3 days, a vehicle with a special tool for turning over the chips is used to ensure uniform drying. Economic loss occurs as a result of weight loss of the chips, caused by wind that blows the dry particulate matter; this is also a major problem leading to air pollution. **Figure 4** presents a pictorial representation of the chipping process.

When it starts raining, chips must be quickly pushed into piles and covered with plastic. This prolongs the drying time and inevitably results in lower chip quality. The final moisture content should be below 14%. Normally it takes 2.00-2.50 kg of fresh roots (with 25% starch content) to produce 1 kg of chips (14% moisture content).

(a) **(b)** **(c)** **(d)**

Figure 4. *Chip processing : (a) Root transportation (b) Conveyor and chopper (c) Sun-drying and (d) Turning chips by tractor*

The Market: Chips are sold to pelleting manufacturers who either directly export the chips/pellets or sell to traders. In most cases, the small chip factories sell their products to large factories that in turn sell a consolidated consignment to pellet manufacturers. Time from purchase of chips to their sale is rapid. Factories in Thailand do not have silo facilities for storage, and all transactions are direct; middlemen or brokers are not involved. Nakhorn Ratchasima province has the highest chip and pellet production in Thailand, and the pellet price in this province is the standard trading index to set the Bangkok market pellet price.

Local consumption of chips: Some portions of cassava chips are used locally for animal feed as well as the feedstock for citric acid production. Recently, the demand of cassava chips for local use has increased dramatically as a result of the national policy of bioethanol production for fuel uses.

Export markets: Since 1981, Thailand has exported to the EU mainly hard pellets rather than chips (**Table 4**). In this form, less dust is created, lowering the impact of environmental pollution during the loading and unloading of ships at the port. Recently, due to the national program on biofuel established in many countries, an export of cassava chips to non- EU countries, especially to China increases. The high carbohydrate content of cassava chips is of value for biotechnological conversion; this utilization will secure a continued future for the cassava chip industry. In China, cassava chips are used as the feedstock for ethanol production as well as the substitute of corn in animal feed. This generates an increase demand from 1.96 to 2.56 million tonnes (equal to 6.25 million tonnes of fresh roots) in 2003 to 2004. The trend still progressively increases.

Table 4. **Quantity (tonnes) of cassava products exported from Thailand during 1966 - 2004.**

Year	Chips	Pellets	Hard Pellets	Starch	Total
1966	521,328	-	-	173,671	694,999
1967	506,169	97,096	-	204,153	807,418
1968	417,282	314,788	-	143,568	875,638
1969	87,844	773,908	-	124,772	986,524
1970	22,620	1,061,065	-	142,914	1,226,599
1971	8,706	966,278	-	146,368	1,121,352
1972	3,905	1,109,363	-	124,453	1,237,721
1973	23,908	1,508,598	-	179,929	1,712,425
1974	105,713	1,924,647	-	254,967	2,285,327
1975	67,989	2,036,110	-	141,676	2,245,775
1976	63,721	3,252,439	-	241,200	3,557,360
1977	104,786	3,564,529	-	122,466	3,871,781
1978	312,598	5,727,531	-	135,028	6,275,157
1979	202,844	3,677,204	-	123,409	4,003,457
1980	256,212	4,452,579	-	148,483	4,957,274
1981	413,122	4,978,137	608,212	109,724	6,309,195
1982	487,247	5,214,592	1,479,856	125,632	7,607,327
1983	266,157	2,391,530	1,637,827	174,194	4,669,708
1984	155,775	2,893,327	2,905,316	464,875	6,419,293
1985	127.161	1,102,432	5,386,950	497,370	7,113,913
1986	68,662	251,161	5,508,254	459,048	6,287,125
1987	97,078	18	5,653,244	369,056	6,119,396
1988	368,328	18	7,183,239	555,746	8,107,331
1989	120,391	-	9,032,918	645,529	9,798,838
1990	269,150	-	7,285,423	656,291	8,210,864
1991	142,472	-	6,044,973	707,051	6,684,228
1992	320,643	-	7,724,387	750,425	8,576,686
1993	71,566	-	6,635,439	653,276	7,360,281
1994	9,909	-	4,732,643	923,561	5,716,113
1995	169,607	-	3,127,525	845,006	4,141,599
1996	2,700	-	3,604,411	893,365	4,500,476
1997	138,586	-	4,016,106	1,140,377	5,295,069
1998	237,162	-	2,961,486	770,096	3,968,744
1999	222,058	-	4,118,549	931,923	5,272,530
2000	95,170	-	3,819,541	1,409,658	5,324,369
2001	1,649,238	-	2,844,741	1,284,547	5,778,526
2002	1,560,352	-	1,496,586	1,307,635	4,364,573
2003	1,974,024	-	2,019,516	1,609,569	5,603,109
2004	2,570,361	-	2,008,610	1,766,400	6,345,371

Source: *Thai Tapioca Trade Association, 2004.*

2. Cassava Pellet Industry

The pellet industry began a few years after the start of cassava exports to the EU (around 1967). Development of this product was stimulated by a need to improve the uniformity in shape and size of cassava chips required by the compound feed producers/users. In addition, during transportation, loading and unloading of chips dust generation caused serious air pollution, placing pressure on the importers in Europe to improve the nature of cassava products handled by the ports. Production of pellets involves pressing chips, and extrusion through a large die. The heat and moisture in the chips helps in the formation of a pellet-like shaped product, known as a soft pellet. Later process developments involved grinding of chips followed by steam extrusion; this created strong pellets upon cooling, known as hard pellets. Exports of hard pellets began in 1981; by 1987 hard pellets dominated pellet production in Thailand and by 1989 these were virtually the only pellets exported to Europe.

The raw material (cassava chips) for pellet manufacture, is purchased from chip drying yards; pellet factories do not produce chips. The purchase price is directly dependent on the export price of pellets in Bangkok. Quality of the chips is also an important consideration. The standard quality of chips is:

Moisture content = max. 16%
Sand = max. 4%
(The sum of the two factors should not exceed 20%)

Moisture content exceeding 16% results in a price penalty, but no reward is given if the moisture is less than 16%.

Competition for raw material by the pellet factories favors those with a large capacity and these always occupy a large proportion of the export quota; these factories can offer a higher price for chips.

There are approximately 200 pelleting factories in Thailand with a total capacity of about 10 million tonnes per year. However, the EU quota is only 5 million tonnes and this is the sole market for this product. The factories are therefore working only at 50% of their capacity (3-4 months per year).

The manufacturing process for pellets is shown in **Figures 5** and **6**.

3. Cassava Starch and Starch-based Industries

At the time that cassava was introduced into the southern part of Thailand (1786-1840), a cottage-scale industry for production of cassava meal or cassava flour was adopted from neighboring countries, Malaysia and Singapore.

Conversion of fresh cassava roots, by grating, mixing with water followed by sedimentation and sun-drying (or conductive heating) produces a product traditionally called “cassava flour” but now called “cassava starch”. Cassava starch may be further processed to make sago pearl, which is a traditional dessert for the people in the southern part of Thailand.

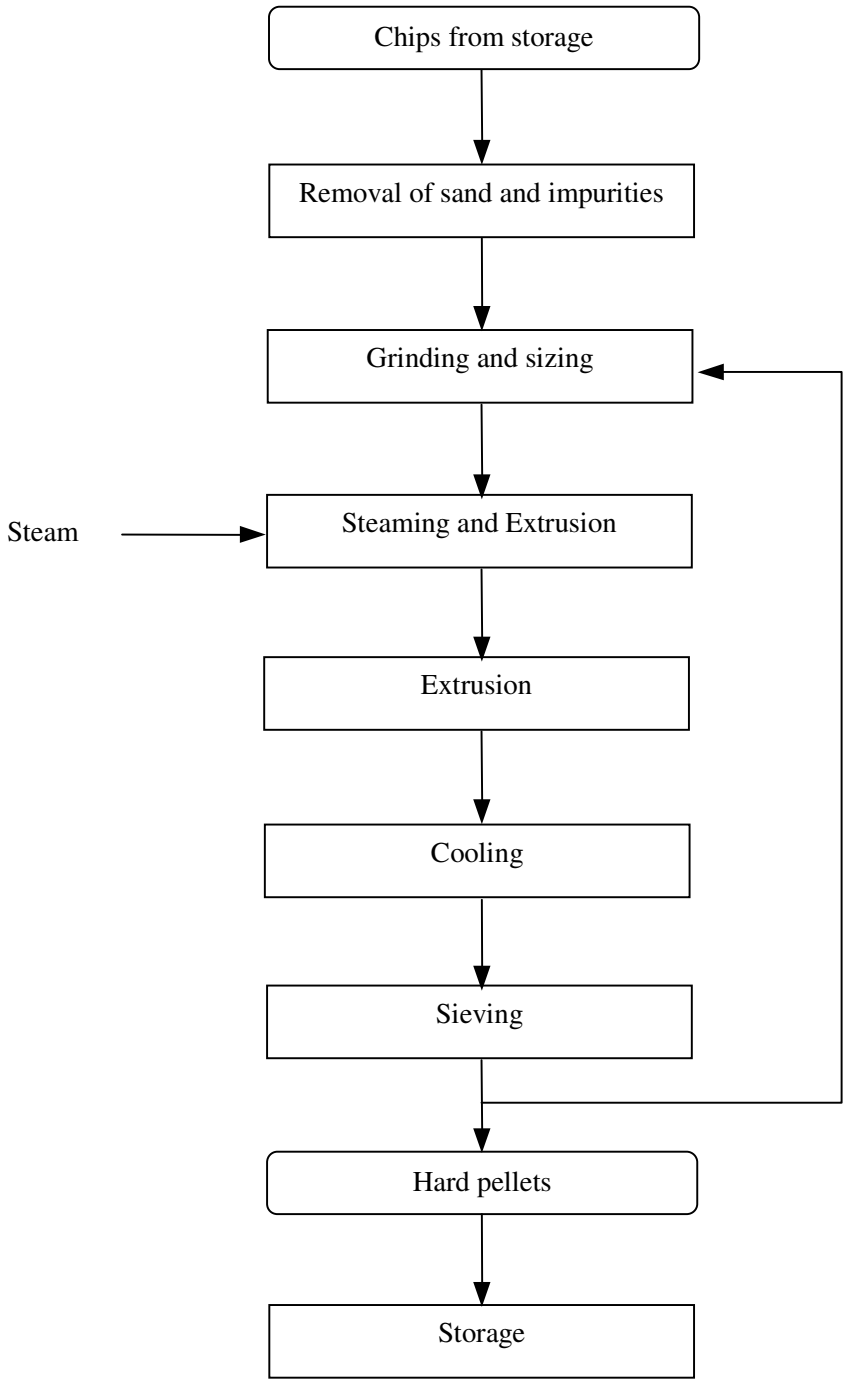

Figure 5. *Process for production of cassava hard pellets.*

(a)

(b)

(c)

(d)

Figure 6. *Pellet processing : (a) Grinding of chips by hammer mill (b) Extrusion (through a die press)*
(c) Cooling chamber and (d) Storage of pellets

Demand for cassava starch increased dramatically and this led to the development of the modern starch manufacturing process in the 1970s. A survey conducted in 1996 indicated that at that time there were 41 modern factories registered to the Thai Tapioca Flour Industries Trade Association. These factories were working with modern separation and drying processes. The processing time (from the grating of fresh root to dried starch) is estimated to be less than 30 minutes. Presently, factories using the sedimentation process do no longer exist in Thailand.

The process for production of cassava starch manufacturing is essentially the same for all factories, and is shown in **Figure 7**. About 4.75 tonnes of fresh roots produce one tonne of dry starch.

About 40% of cassava starch, i.e. 600,000-800,000 tonnes, is used domestically and 60% i.e. 700,000-900,000 tonnes, for export (**Table 5**) (The Thai Tapioca Flour Industries Trade Association, 1999).

Distribution from factories is by three outlets; 1) direct sale for general consumption and local factories, 2) sale to intermediary dealers for domestic retail and export, and 3) direct export.

Table 5. Production and uses (tonnes) of cassava starch in Thailand during 1991- 2004.

Year	Domestic	Export	Total
1991	460,000	707,051	1,167,051
1992	510,000	750,425	1,260,425
1993	560,000	653,276	1,213,276
1994	610,000	923,561	1,533,561
1995	600,000	845,006	1,445,006
1996	676,500	893,365	1,569,865
1997	700,000	1,140,377	1,840,377
1998	350,000	770,096	1,120,096
1999	650,000	1,028,021	
2000		1,409,658	
2001		1,284,547	
2002		1,307,635	
2003		1,609,569	
2004		1,766,400	

Source: *The Thai Tapioca Trade Association,2005*

3.1 Domestic market (see Table 6)

Monosodium glutamate (MSG)/lysine: Highest consumption of cassava native starch is by the MSG (four factories) and lysine (one factory) industries. Starch consumption for production of these products is in the proportion 80:20 by the MSG and lysine industries, respectively. Production of commercial MSG in Thailand utilizes only two carbohydrate sources for inoculation: molasses and cassava starch. To produce one tonne of MSG, factories need either about 2.4 tonnes of cassava starch or 7.0 tonnes of molasses.

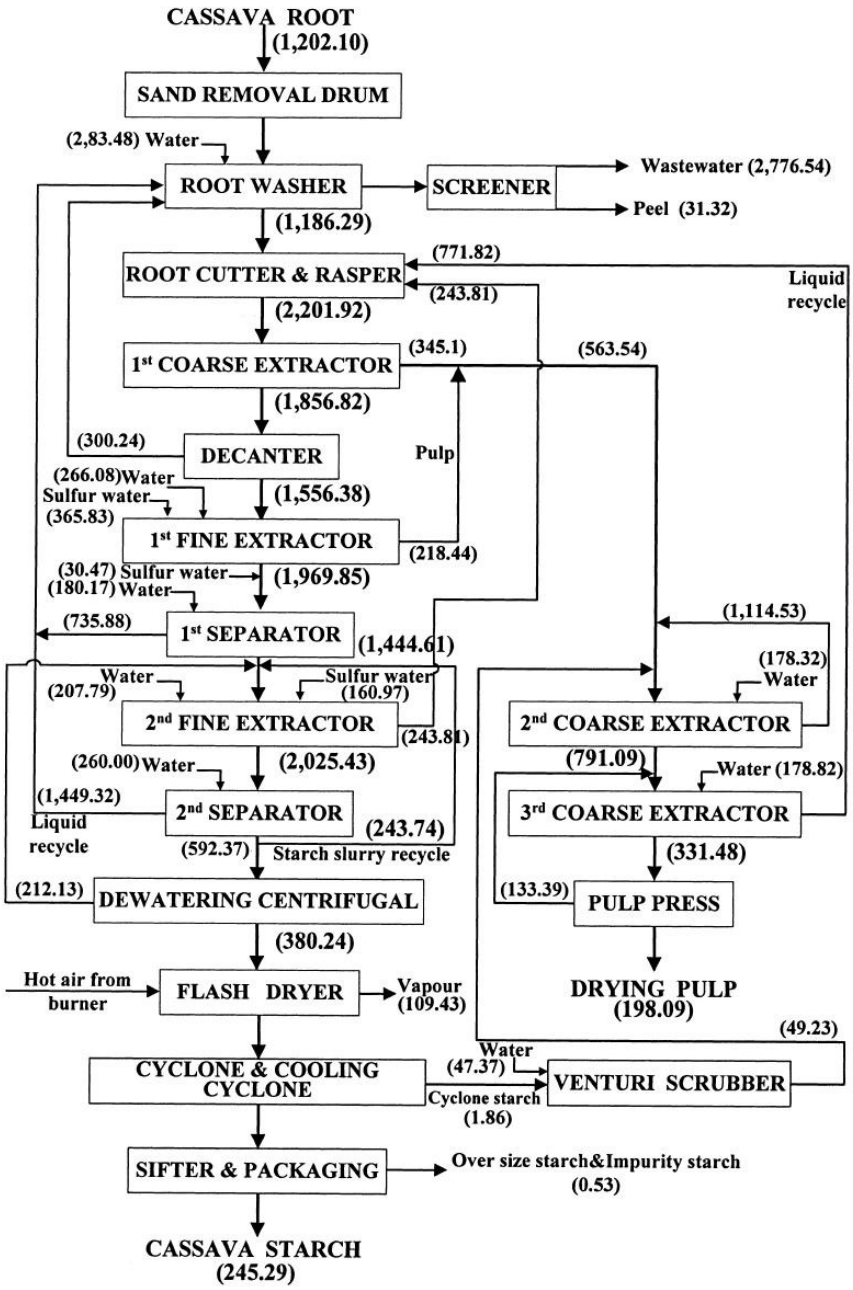

Figure 7. *Mass Balances of the cassava starch manufacturing process in Thailand. (Unit : tonne/day)*

Source : Sriroth et al. (2000)

Table 6. Annual demand of cassava starch for the production of sweeteners and MSG/lysine in Thailand.

Products	Quantity of starch used (tonnes/year)	Product (kg/kg of starch)
High fructose	54,000	1.00
Glucose syrup	60,000	0.90-0.95
Dextrose monohydrate	20,000	1.75
Dextrose anhydrous	500	0.50
Sorbitol	30,000	1.20
MSG/Lysine	232,980	0.42

Source: *Sriroth, 1998.*

Sweeteners (glucose/fructose/sorbitol): There are 14 factories manufacturing glucose syrup (two also produce sorbitol) and two large international sorbitol producers (Ueno Co., Ltd., Japan, and Lucky Chemical Co., Ltd., Korea). In 1998 there was only one factory producing high fructose syrup (about 60,000 tonnes per year).

Food/sago industry: Cassava starch is widely used by the food industry, especially for canned products. Properties of cassava starch as a binding and thickening agent play important roles in many products such as ice-cream, noodles and puddings. It is also used as a filler in wheat flour to control protein content. The amount of starch used in the sago industry is 6% of total domestic cassava starch consumption.

Paper/textile/plywood: Cassava starch has the properties of gel formation and retrogradation. For this reason it is widely used in the paper industry for surface treatment (sizing). In the textile industry it is used for yarn treatment and in the plywood industry for its binding properties. Starch consumption in paper, textile and plywood industries are 11, 3 and 1%, respectively, of total domestic cassava use (The Thai Tapioca Flour Industries Trade Association, 1999).

Citric acid: There are only three factories manufacturing citric acid in Thailand. One uses cassava pulp from starch factories as the raw material (about 5-6 tonnes/day) for its solid state (surface) fermentation. The others, recently established, uses cassava chips as raw material for its solid/submerged fermentation process. About 40 tonnes of chips are needed to produce 6 tonnes of citric acid per day.

3.2 Export/International Market

Of the various cassava-based products mainly cassava starch and pellets are exported (**Table 7**). In the future, the export of cassava starch will be more significant in both value and volume. Thailand exports not only native cassava starch but also the modified products, for example, chemically and physically modified starch, sago, seasoning powder, sorbitol and liquid glucose. Future exports of cassava starch are expected to increase due to the growth of global industrial sector and starch market expansion. The

export of cassava starch and its derivatives, however, has to comply with the AFTA (Asean Free Trade Area) and FTA (Free Trade Area) agreements with other countries.

Table 7. Quantity (tonnes) and destination of cassava products exported from Thailand during 2003 and 2004.

	Chips		Hard pellets		Starch	
Country	2003	2004	2003	2004	2003	2004
Africa	-	-	-	-	-	-
Australia	-	-	-	-	38,591	37,667
Bangladesh	-	-	-	-	19,666	23,801
Belgium	-	-	114,825	128,970	2,413	1,615
Brazil	-	-	-	-	20,010	30,343
Canada	-	-	-	-	4,826	19,364
China	1,968,283	2,557,330	21,800	-	132,162	239,645
France	-	-	-	-	4,984	5,170
Germany	-	-	-	-	5,131	13,736
Hong Kong	-	-	-	-	71,726	75,732
Indonesia	-	278	-	-	280,639	114,580
Iran	5	-	4	-	-	-
Israel	-	-	-		-	-
Italy	-	-	38,000	58,775	-	-
Japan	357	221	20,489	36,608	312,959	363,568
Laos	-	-	-	-	3,823	39,420
Malaysia	1,212	8,010	1,804	8,835	122,539	3,691
Mexico	-	-	-	-	833	96,509
Netherlands	-	-	933,104	739,241	35,213	1,001
New Zealand	-	-	-	-	5,401	86,728
Norway	-	-	-	-	1,560	5,410
Philippines	-	-	6,200	6,200	35,464	1,640
Poland	-	-	-	-	-	-
Portugal	-	-	292,375	85,153	-	-
Saudi Arabia	-	-	-	-	4,604	61,336
Singapore	-	-	-	-	60,218	23,021
Spain	-	-	554,425	848,018	-	-
Sri Lanka	-	-	-	-	3,773	5,404
South Korea	-	-	-	81,150	31,628	11,463
South Africa	4,166	-	-	-	18,541	44,724
Sweden	-	-	-	-	5,090	6,320
Switzerland	-	-	5,000	-	20	34
Taiwan	1	4,522	31,400	14,300	282,735	301,878
U.K.	-	-	-	-	2,484	3,868
U.S.A.	-	-	-	-	40,016	43,760
Other	-	-	-	-	62,457	104,974
Total	**1,974,024**	**2,570,361**	**2,019,516**	**2,008,610**	**1,609,569**	**1,766,400**

Source: *Thai Tapioca Trade Association, 2004.*

4. Cassava in biofuel industries

Ethanol or ethyl alcohol, an alternative biofuel which is used to blend with gasoline to obtain a product called gasohol, can be produced from various carbohydrate-containing materials by yeast fermentation. In Thailand, there are many economic crops that can be used as the raw material for ethanol production including sugar cane, cassava, rice, sweet sorghum and corn. The most promising ones are sugar cane, molasses - the by-product obtained from cane sugar processing and cassava. To produce ethanol from cassava, the starch is initially converted to fermentable sugars, mainly glucose by enzyme or acid process. The sugars are then fermented to ethanol by yeast. To produce 1 liter of anhydrous ethanol, around 6 kg of fresh roots (25% starch content) or 2.5 kg of dried chips (65% starch content) are required; the conversion ratio, however, varies depending on processing efficiency. The great benefit of cassava over sugar cane is the material versatility as it can be processed in form of fresh roots during the harvest season or dried chip and extracted starch when fresh roots are out of season. Currently, there are six factories possessing licenses to produce fuel ethanol from cassava, the total capacity is estimated to be 2.120 million liters per day, when the factories are fully operated. Whereas the other eighteen factories own the licenses to produce fuel ethanol from molasses with the total production of 2.565 million liters per day. Recently, with a tremendous increase in gasohol demand encouraged by price incentive of the national policy, there is a shortage of molasses and the price increases dramatically which affects the implementation of the national energy agenda. Consequently, the National Biomass Energy Committee, previously named as the National Ethanol Committee, has approved permission to another nine factories from eighteen to produce fuel ethanol from cassava during the molasses shortage, resulting in the maximum capacity of 3.350 million liters of ethanol per day. This will cause an enormous demand of cassava up to 20,000 tonnes of roots per day or 7.2 million tonnes of roots per annum.

In practice, to produce ethanol from cassava, fresh roots or dried chips are initially milled and slurried with water. The starch slurry is then jet-cooked and liquefied by liquefying enzymes at a high temperature (at 95°C and pH 6) for a certain period of time. This stage is called liquefacton. The liquefied slurry is subsequently subjected to further hydrolysis to small sugar molecules, mainly glucose by saccharifying enzymes at a mild temperature (at 60°C and pH 4.0 to 4.5) which is called saccharification step. The sugar syrup is then proceeded to yeast fermentation (at 30°C and pH 4.0 to 4.5) and the mash is used for distillation and dehydration to obtain anhydrous ethanol. As whole roots are utilized, the fiber-rich solid waste is produced and can be mixed with the stillage obtained from mash distillation to produce Distiller Dried Grains with Soluble (DDS), which can be used as animal feed. To improve the production efficiency and minimize the production cost, saccharifying enzymes have been developed to perform the hydrolysis simultaneously with yeast fermentation, the process of which is called Simultaneous Saccharification and Fermentation (SSF). Recently, the granular starch hydrolyzing enzymes – the mixed enzymes that can act on uncooked starch have been introduced. This provides the possibility to apply enzymes and yeast simultaneously to starch without using jet cooker.

GOVERNMENT POLICY

The Office of Agricultural Economics, Ministry of Agriculture and Cooperatives, is in charge for formulating national cassava policies with the cooperation of other organization; important are Ministry of Commerce, the Thai Tapioca Development Institute (TTDI) and non-profit private organization including the Thai Tapioca Trade Association (TTTA), the Thai Tapioca Flour Industries Trade Associations, the Thai Tapioca Starch Association (TTSA) and North Eastern Tapioca Trade Association. The core of cassava roadmap contains four important strategies including improvement of root productivity, development of value added cassava-based products, cassava market expansion and support of research and development for cassava industry.

(a) Strategy I: Improvement of root productivity. The total cassava-planted area remains unchanged as it is reserved to be 6.6 million rai or 1.056 ha. An increase of root productivity can be achieved by implementing good cultural practice including dissemination of good stake of good varieties, soil fertility maintenance, intercropping system, crop rotation, weed control, good soil preparation and good harvest practice. Currently, the root productivity is about 3.0 tonnes per rai and by 2007, the root productivity should be increased to 5 tonnes per rai for promoted area (1.2 million rai) and to 3.4 tonnes per rai for the rest.

(b) Strategy II: Value addition of cassava-based products. The estimation of root production and consumption for industrial processing in 2008 are summarized in **Figure 8**. The establishment of fuel ethanol production from cassava is recognized, however the utilization of cassava as the raw material for this purpose should be well-managed so that it will not considerably interfere other current industries. This will be performed by various approaches including contract farming, root and ethanol price guarantee, determined ethanol policy of government. Moreover, since cassava chip market has expanded substantially as they are used as the feedstock for producing many chemicals, the government has promoted the production of clean chips for this purpose. In addition, the government has supported the SMEs for downstream process of cassava either by technology transfer or technology import to rapidly promote cassava conversion.

(c) Strategy III: Market expansion. It is very critical that Thai cassava industry has to improve and maintain the quality of cassava-based products. That will make Thailand as the leader in producing and exporting cassava-derived products. Various means have to be implemented to increase cassava consumption, both onshore and offshore.

(d) Strategy IV: Research and development. The R & D of cassava as well as the development of human resource in cassava area have to be continued in order to support and strengthen the competitiveness of Thai cassava industry. Many urgent tasks relating to cassava production such as new variety development, weed control technology evaluation, post harvest technology improvement and on-farm machinery development have to be achieved rapidly.

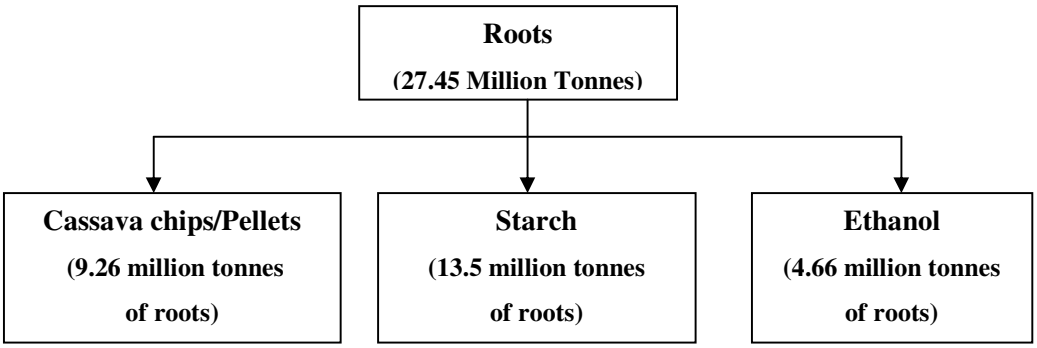

Figure 8. *Expected production and consumption of cassava roots for industrial processing in Thailand in 2008.*

REFERENCES

Cenpukdee, U. , C. Thiraporn and S. Sinthuprama. 1992. Cassava processing and utilization in Thailand. *In*: G. Scott, S. Wiersema and P. I. Ferguson (Eds.). Product Development for Root and Tuber Crops. Vol. I-Asia. Proceedings of the International Workshop, held in Leyte, Philippines. April 22-May 1, 1991. International Potato Center (CIP), Lima, Peru 1992, 384p.

Limsila, J., A. Limsila, W. Watananonta and K. Kawano. 1996. Cassava breeding and varietal improvement in DOA and CIAT-Bangkok, Thailand. 9 p. (paper in mimeograph) (in Thai)

Office of Agricultural Economics. 1994. Official document No. 19/2537 (1994). Bangkok.

Office of Agricultural Economics. 1998 Personal Communication.

Office of Agricultural Economics. 1999. Agricultural Statistics of Thailand 1997/1998. Agricultural Statistics No. 31/2542. Ministry of Agriculture & Co-operatives. Bangkok.

Office of Agricultural Economics. 2004. Agricultural Statistics of Thailand 2003. Agricultural Statistics No. 411. Ministry of Agriculture & Co-operatives. Bangkok.

Office of Agricultural Economics. 2005. Agricultural Statistics of Thailand 2004. Agricultural Statistics No. 410. Ministry of Agriculture & Co-operatives. Bangkok.

Ratanawaraha, C., N. Senanarong and P. Suriyapan. 2000. Status of Cassava in Thailand: Implications for Future Research and Development. Paper prepared for The Global Cassava Development Strategy Validation Forum, held in Rome, Italy. April 26-28, 2000. IFAD/FAO. Rome, Italy. 34 p.

Sarakarn, S., A. Limsila, W. Watananonta, D. Suparhan and P. Suriyaphan. 2001. Cassava breeding and varietal dessemination in Thailand: Major achievements during the past 25 years. *In*: R.H. Howeler and S.L. Tan (Eds.). Cassava's Potential in Asia in the 21st Century: Present Situation and Future Research and Development Needs. Proc. 6th Regional Workshop, held in Ho Chi Minh city, Vietnam. Feb 21-25, 2000. (this Proceedings)

Sriroth K., K.Piyachomkwan, S.Wanlapatit and C.G.Oates. 2000. Cassava Starch Technology : the Thai Experience. Starch/Starke 52 : 439-449.

Sriroth, K. 1998. Status of the Cassava-Industry Technology in Thailand, National Center for Genetic Engineering and Biotechnology (BIOTEC), Thailand. 113 p. (in Thai)

Thai Tapioca Flour Industries Trade Association. 1999. Annual Report. Bangkok, Thailand.

Thai Tapioca Trade Association. 1998. Yearbook 1997, Thailand.

Thai Tapioca Trade Association. 1999. Yearbook 1998, Thailand.

Thai Tapioca Trade Association. 2000. Yearbook 1999, Thailand.

Thai Tapioca Trade Association. 2004. Yearbook 2003, Thailand.

Thai Tapioca Trade Association. 2005. Yearbook 2004, Thailand.

The Thai Tapioca Flour Industries Trade Association. 1994. 18h Anniversary The Thai Tapioca Flour Industries Trade Associations, Thailand.
The Thai Tapioca Flour Industries Trade Association. 2000. 24th Anniversary The Thai Tapioca Flour Industries Trade Association, Thailand.